MODULE RELAY RS485

Sheet: /		
File: Module_Relay_RS485.kicad_sch		
Title:		
Size: A4	Date:	**Rev:**
KiCad E.D.A. 9.0.1		Id: 1/8

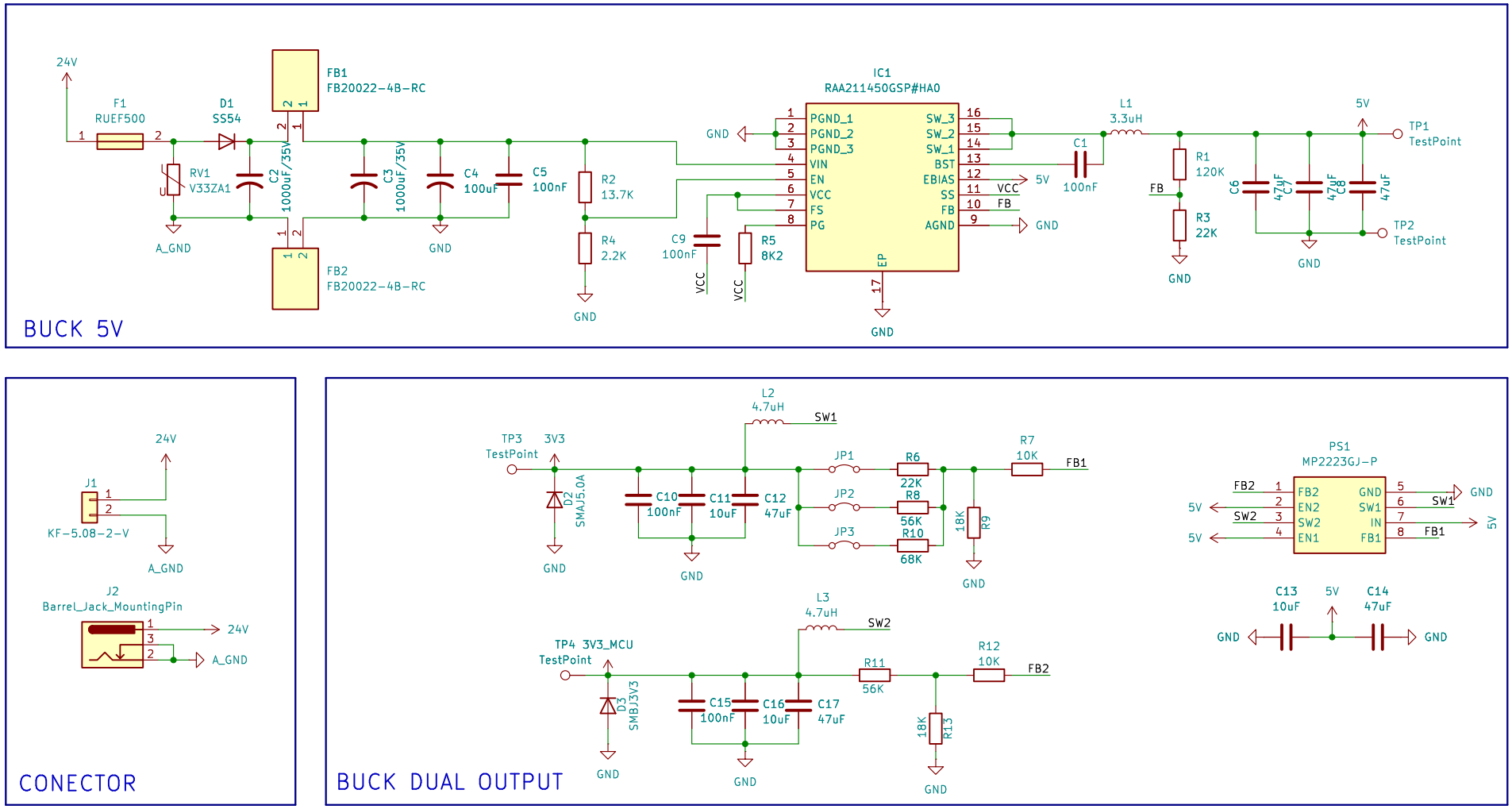

Sheet: /[01] POWER/
File: POWER.kicad_sch

Title:

Size: A4	Date:	Rev:
KiCad E.D.A. 9.0.1		Id: 2/8

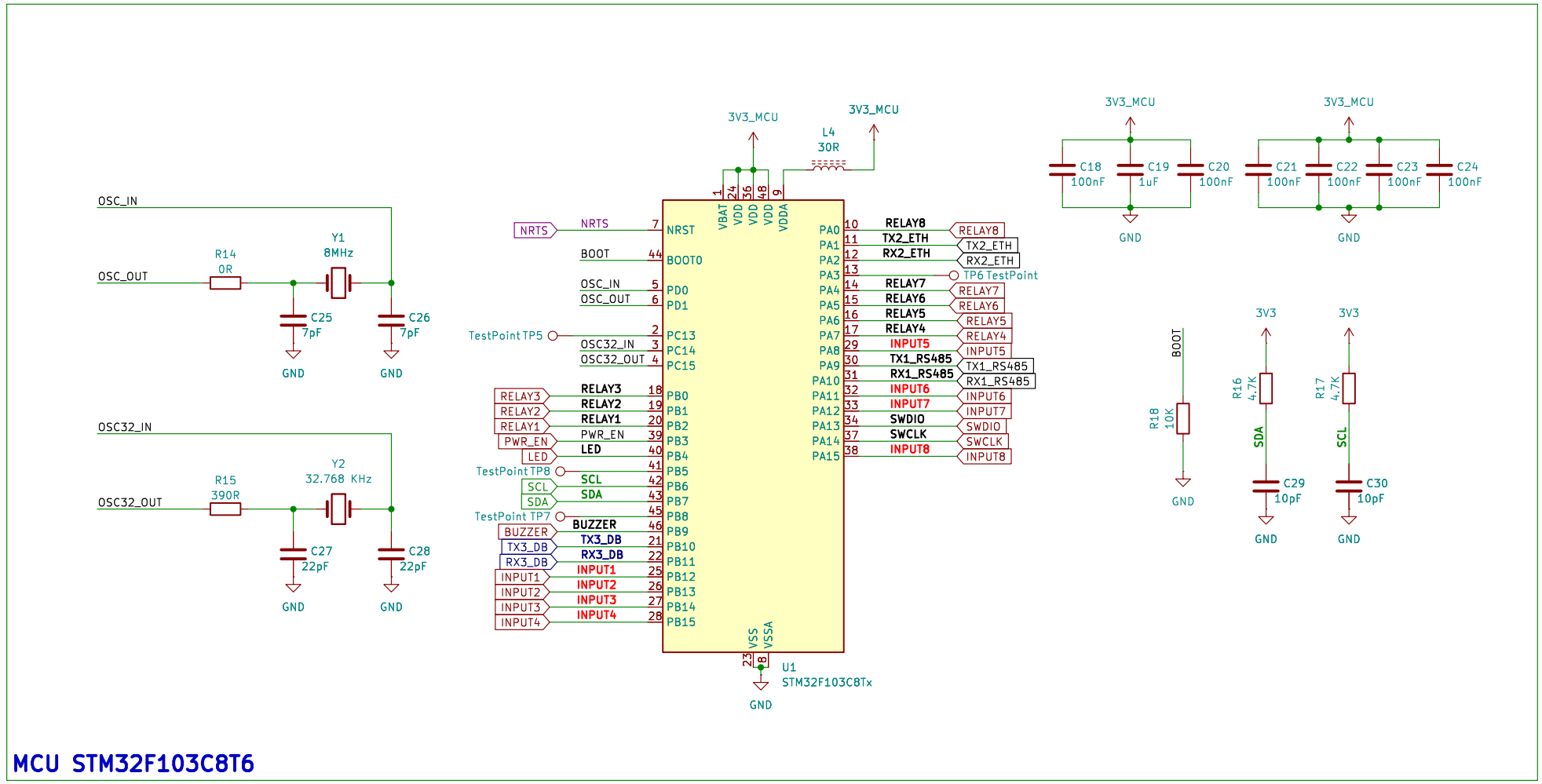

Sheet: /[02] MCU/
File: MCU.kicad_sch

Title:

Size: A4	Date:	Rev:
KiCad E.D.A. 9.0.1		Id: 3/8

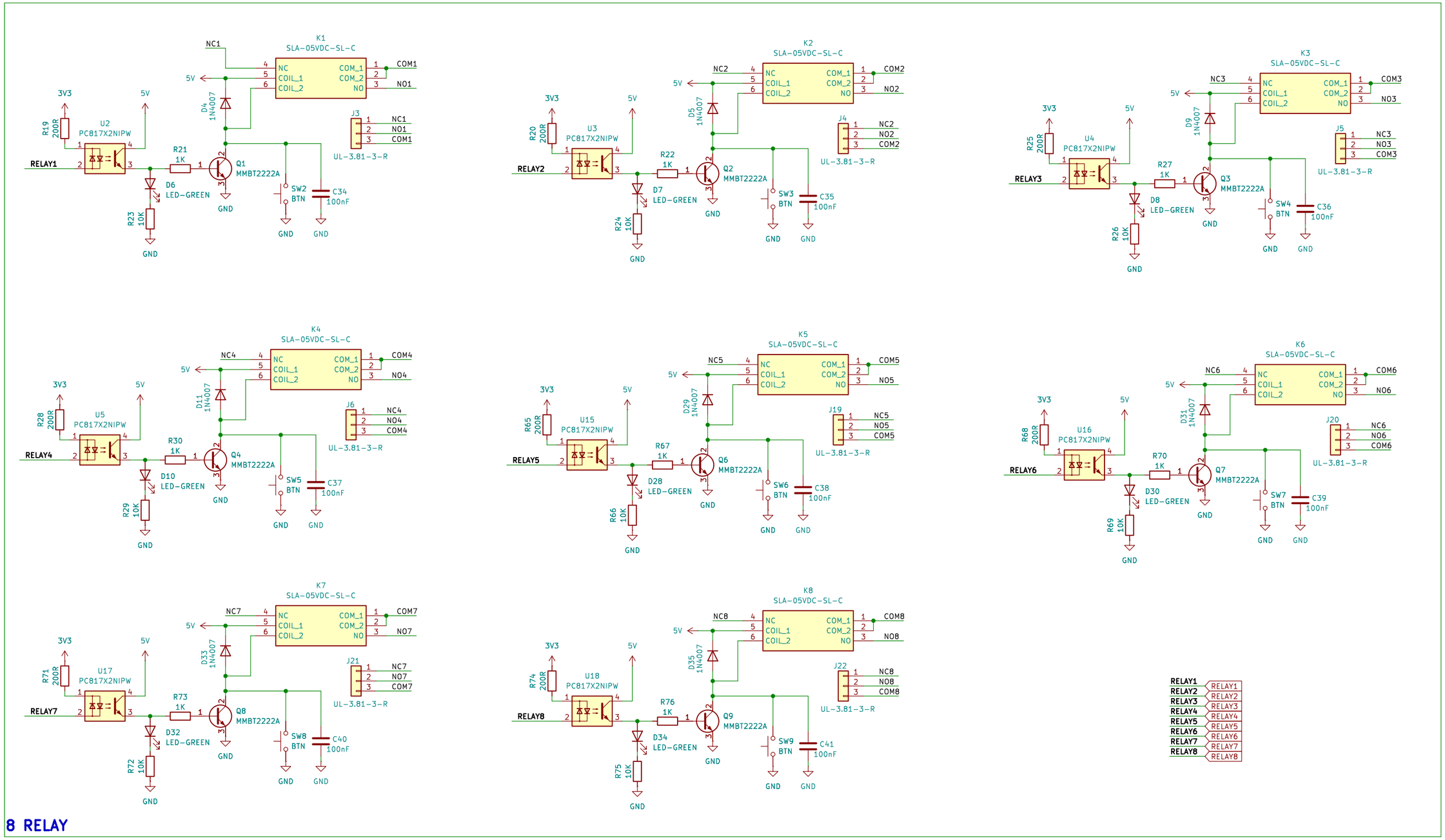

Sheet: /[03] RELAY/
File: RELAY.kicad_sch

Title:

Size: A3	Date:	Rev:
KiCad E.D.A. 9.0.1		Id: 4/8

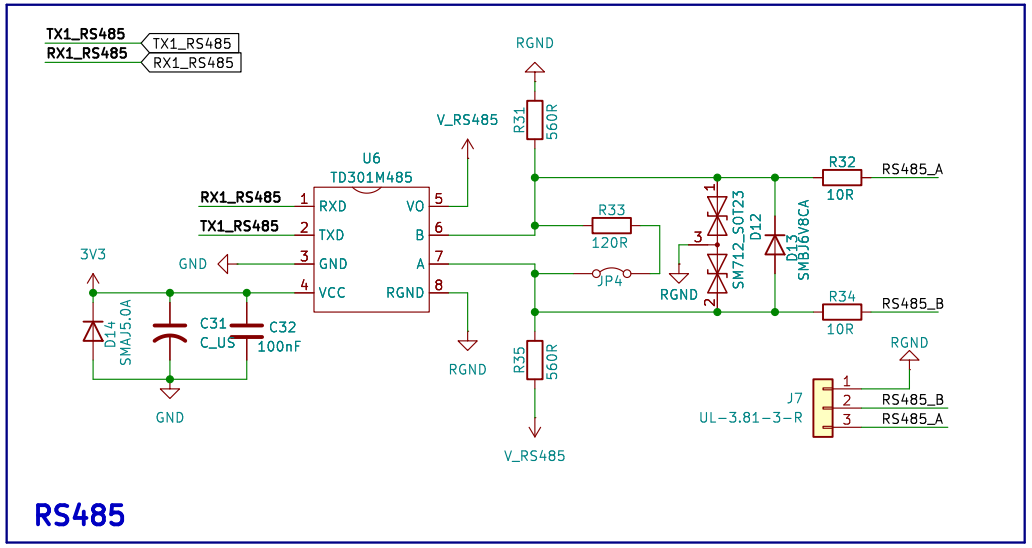

Sheet: /[04] RS485/
File: RS485.kicad_sch

Title:

Size: A4	Date:	Rev:
KiCad E.D.A. 9.0.1		Id: 5/8

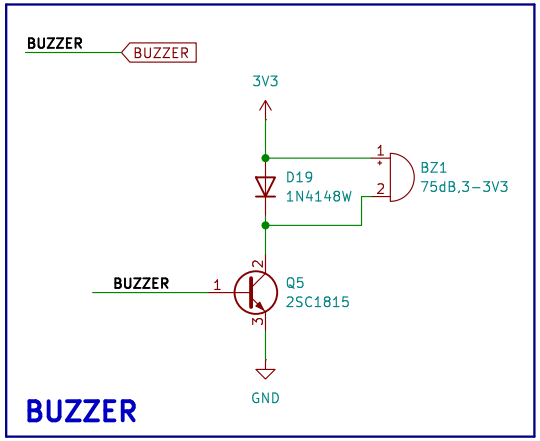

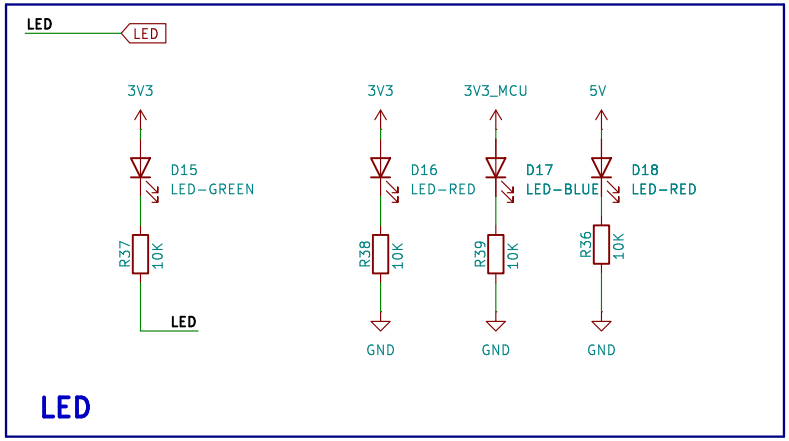

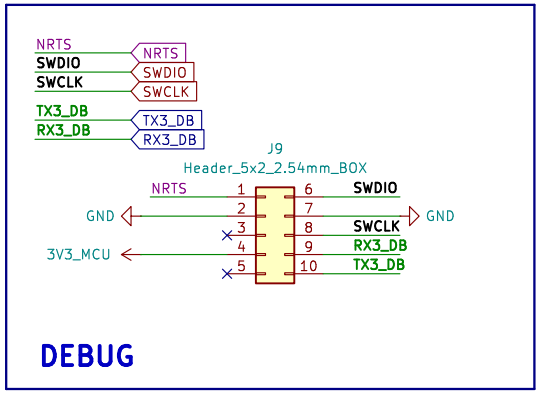

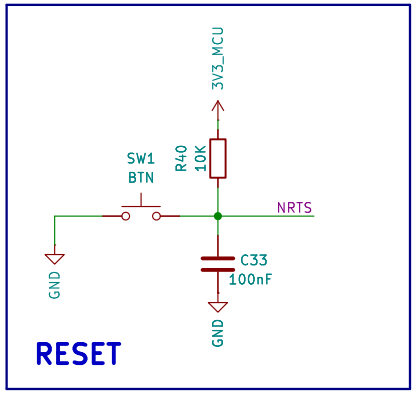

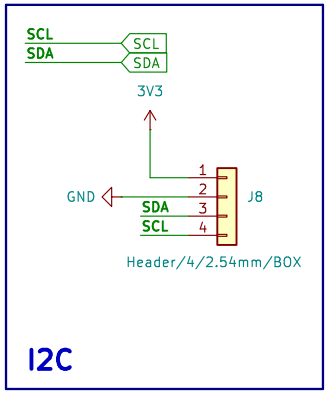

Sheet: /[06] DEBUG/
File: DEBUG.kicad_sch

Title:

Size: A4	Date:	Rev:
KiCad E.D.A. 9.0.1		Id: 6/8

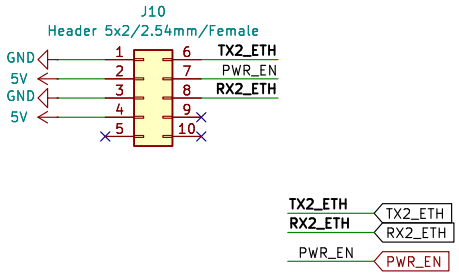

ETHERNET SOCKET

Sheet: /[05] MODULE ETHERNET/
File: MODULE_ETHERNET.kicad_sch

Title:

Size: A4	Date:	**Rev:**
KiCad E.D.A. 9.0.1		Id: 7/8

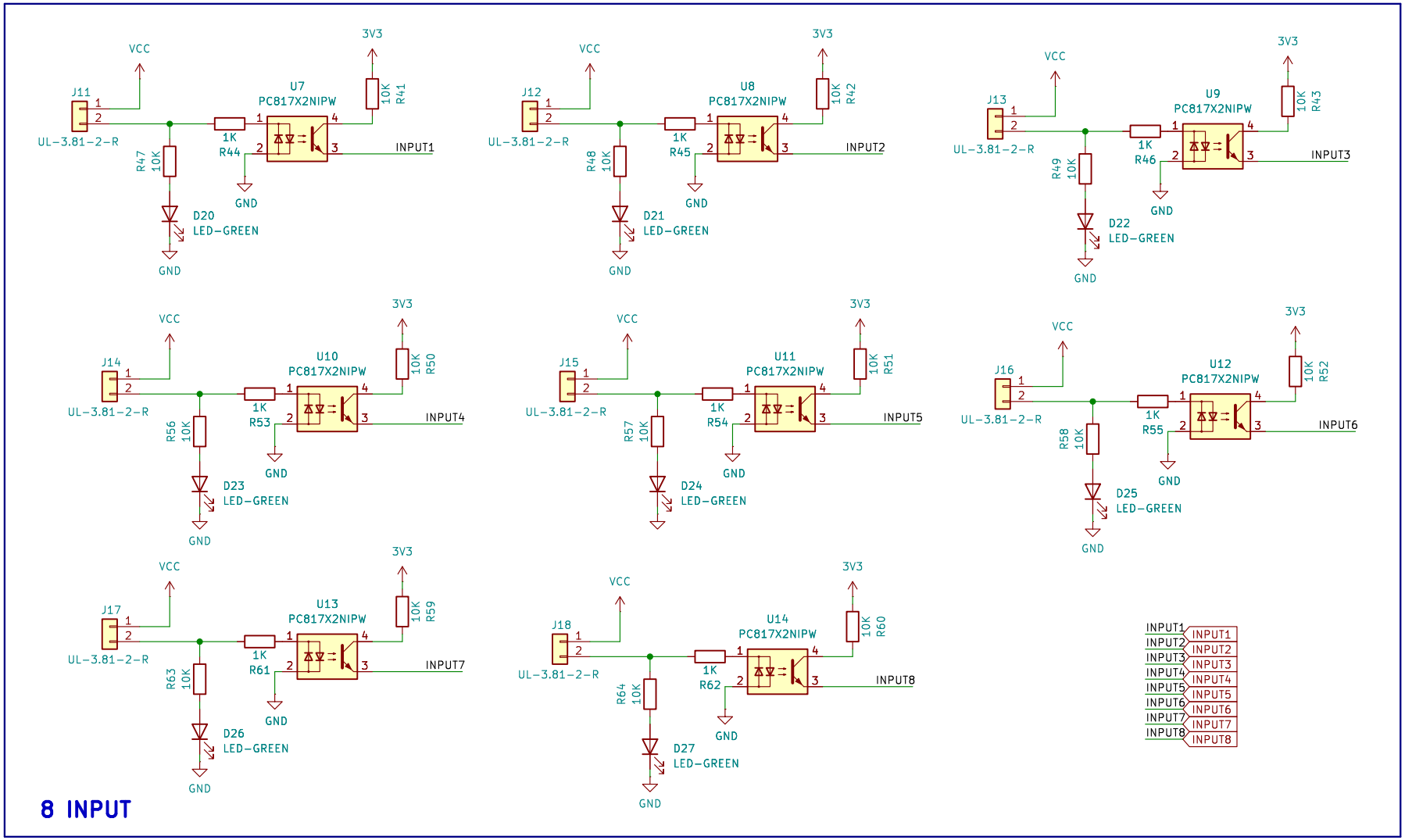

Sheet: /[07] INPUT/
File: INPUT.kicad_sch

Title:

Size: A4	Date:	Rev:
KiCad E.D.A. 9.0.1		Id: 8/8